SIZE	TAG NO.	Q'ty
50A	1HG-V301	2

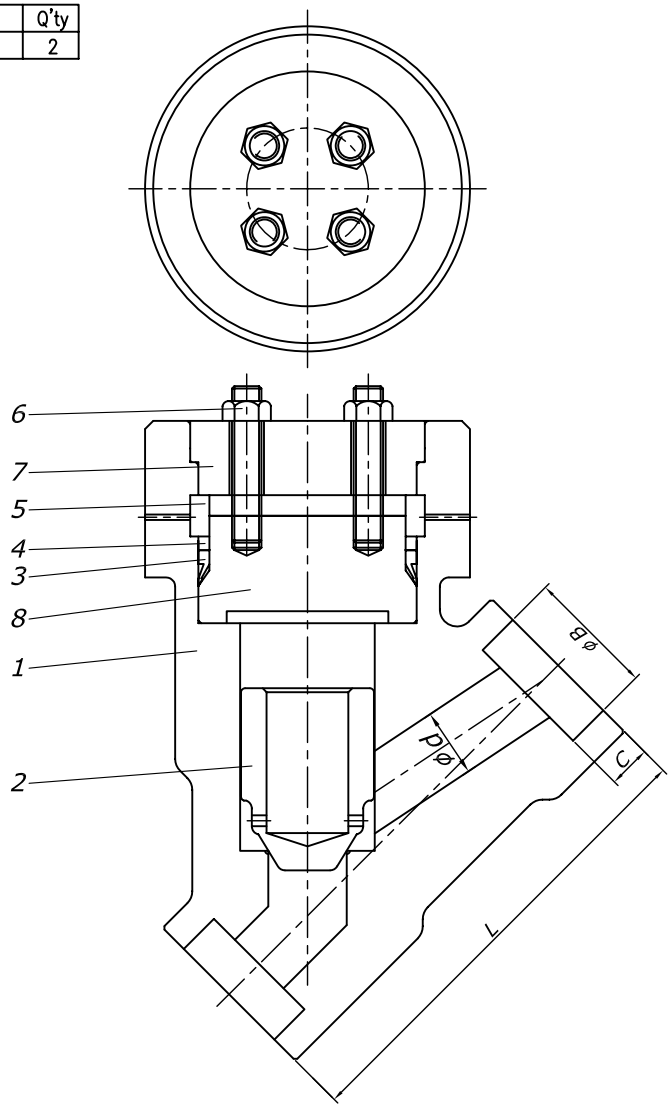

BILL OF MATERIALS

No.	PART NAME	MATERIAL	Q'TY
1	Body	A105	1
2	Disc	A276-410	1
3	Gasket	304 SS	1
4	Spacer Ring	A276-410	1
5	Segmental Thrust Ring	A276-410	2
6	Cover bolt/nut	A193-B7/A194-2H	-
7	Cover Retainer Plate	A105	1
8	Bonnet	A105	1

NOTE

1. VALVE DESIGN: ASME B16.34
2. END CONNECTION: ASME B16.11
3. HYDROSTATIC TEST
   Shell:384.4 BarG
   Seat:282.9 BarG
4. PORT: FULL

DIMENSIONS (UNIT: mm)

SIZE		L	H	ϕd	ϕB	C		WEIGHT(kg)	Q'TY
1/2"	15A								
3/4"	20A								
1"	25A								
1 1/4"	32A								
1 1/2"	40A								
2"	50A	240	160	36	61.45	16		12.0	2

BODY SEAT SURFACE	■ STELLITED ☐ MONEL FACE ☐ HARDENED
DISC SURFACE	■ STELLITED ☐ MONEL FACE ☐ HARDENED
PAINTING OR COATING	■ PHOSPHATIZED ☐ AL PAINTED ☐ BLACK PAINTED ☐ OTHER ☐ NONE

NO.	DATE	DESCRIPTION	DRA.	CHK.	APP.
A	2011.09.09	FOR APPROVAL	J.J.Y	J.J.G	J.J.H

TITLE	1500LBS , A105 P.S.C Y-LIFT CHECK VALVE , SW			
APP.	CHK.	DRA.	SCALE	NON
J.H.JEON	J.G.JEON	J.Y.JANG	DATE	2011.09.05
			DWG NO.	DKM110905-J-15

DONG KANG METAL CO.,LTD.